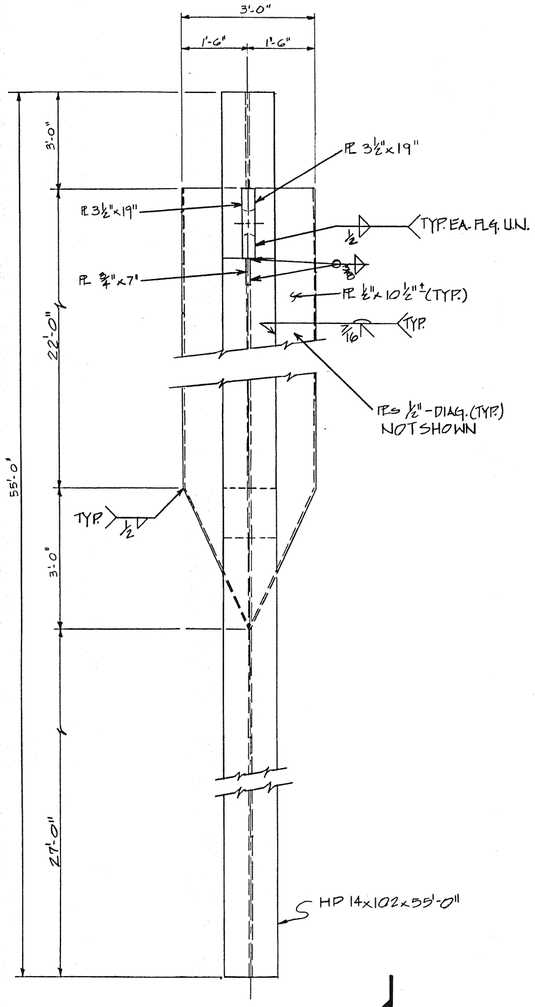


ELEVATION
SCALE: ¾"=1'-0"

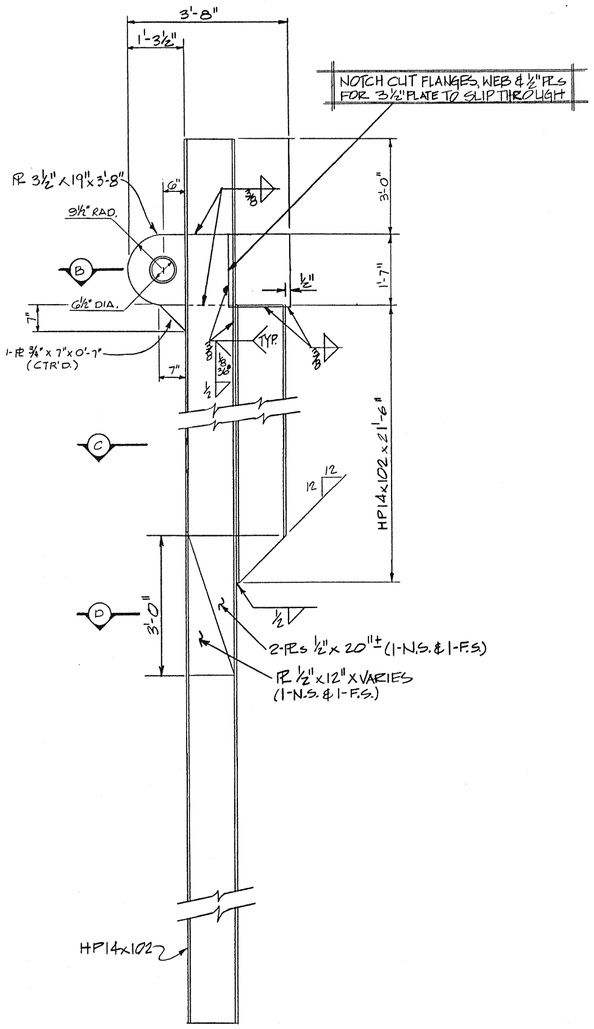


SECTION "A"
SCALE: ¾"=1'-0"

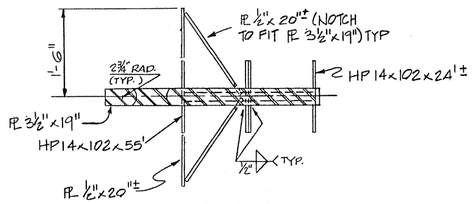


FOR WELDS SEE TYP. DETAIL
SECTION "B"
N.T.S.

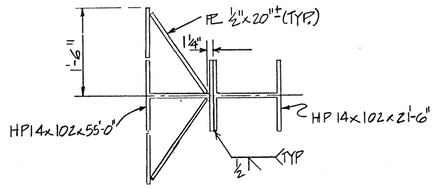


FOR WELDS SEE TYP. DETAIL
SECTION "C"
N.T.S.

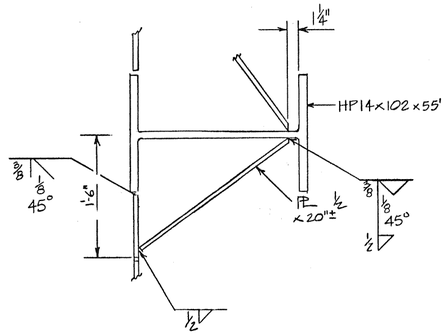


TYPICAL WELDING DETAIL
N.T.S.

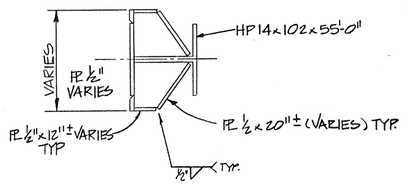


FOR WELDS SEE TYP. DETAIL
SECTION "D"
N.T.S.

DETAILS
MOORING STAKES

| REVISION | DATE | DESCRIPTION | BY |
|---|---|---|---|
| | | | |

OFFICE OF THE DISTRICT ENGINEER
U.S. ARMY ENGINEER DISTRICT, GALVESTON
CORPS OF ENGINEERS
GALVESTON, TEXAS

DRAWN BY:
TRACED BY:
CHECKED BY: 7/7/89
SUBMITTED BY: Robert R. Potter
CHIEF STRUCTURAL SECTION
APPROVED: CHIEF DESIGN BRANCH

BEAUMONT, TEXAS
U.S. MARITIME ADMINISTRATION
RESERVE FLEET SITE
DREDGING AND STAKE RENEWAL

**MOORING STAKE DETAILS**

APPROVED: CHIEF ENGINEERING DIVISION
DATE: JULY 1989
SCALE:
SPEC. DATE
DRAWING NUMBER S-6
SHEET 18 of 18 FILE NO. SN 105-199

PREPARED UNDER THE DIRECTION OF
JOHN A. TUDELA, COL., C.E.
COMMANDING